SQUID SMALL

DELIVERY & UNPACKING

Squid Small comes unassembled in three cardboard boxes. One with various accessories and one with the table top and bench, and one with a guide ring. The packaging is cardboard and recyclable.

There should be at least two people to assemble table.

The table weighs 45 kg when assembled. Recommendation: Use a pallet lifter if the boxes or the assembled table must be moved.

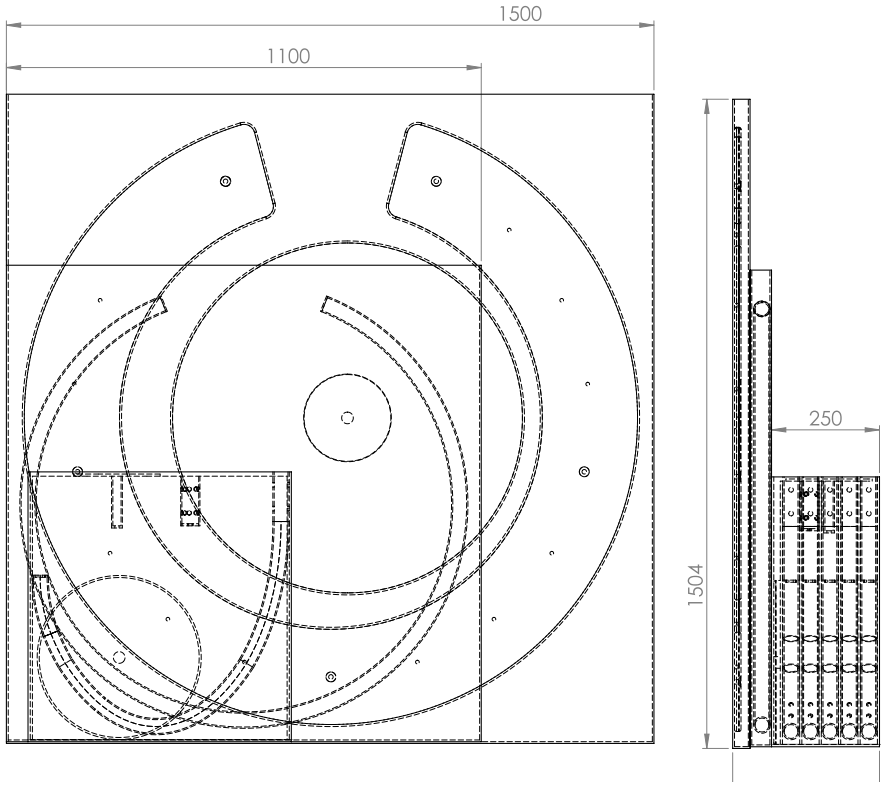

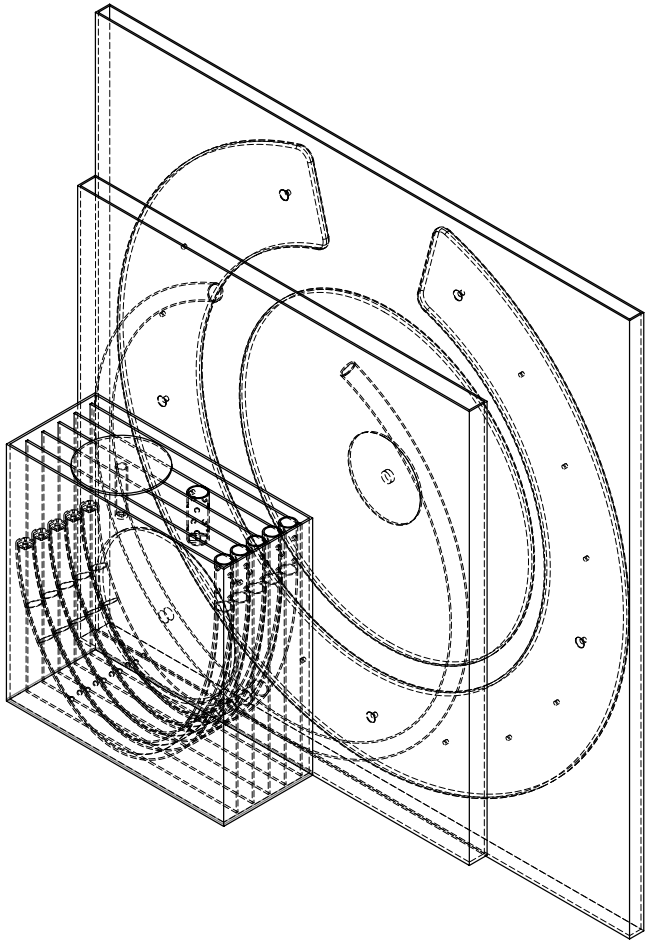

MANGA STREET APS
Web: www.mangastreet.eu
Mail: manga@mangastreet.eu